RR - SERIES

Range

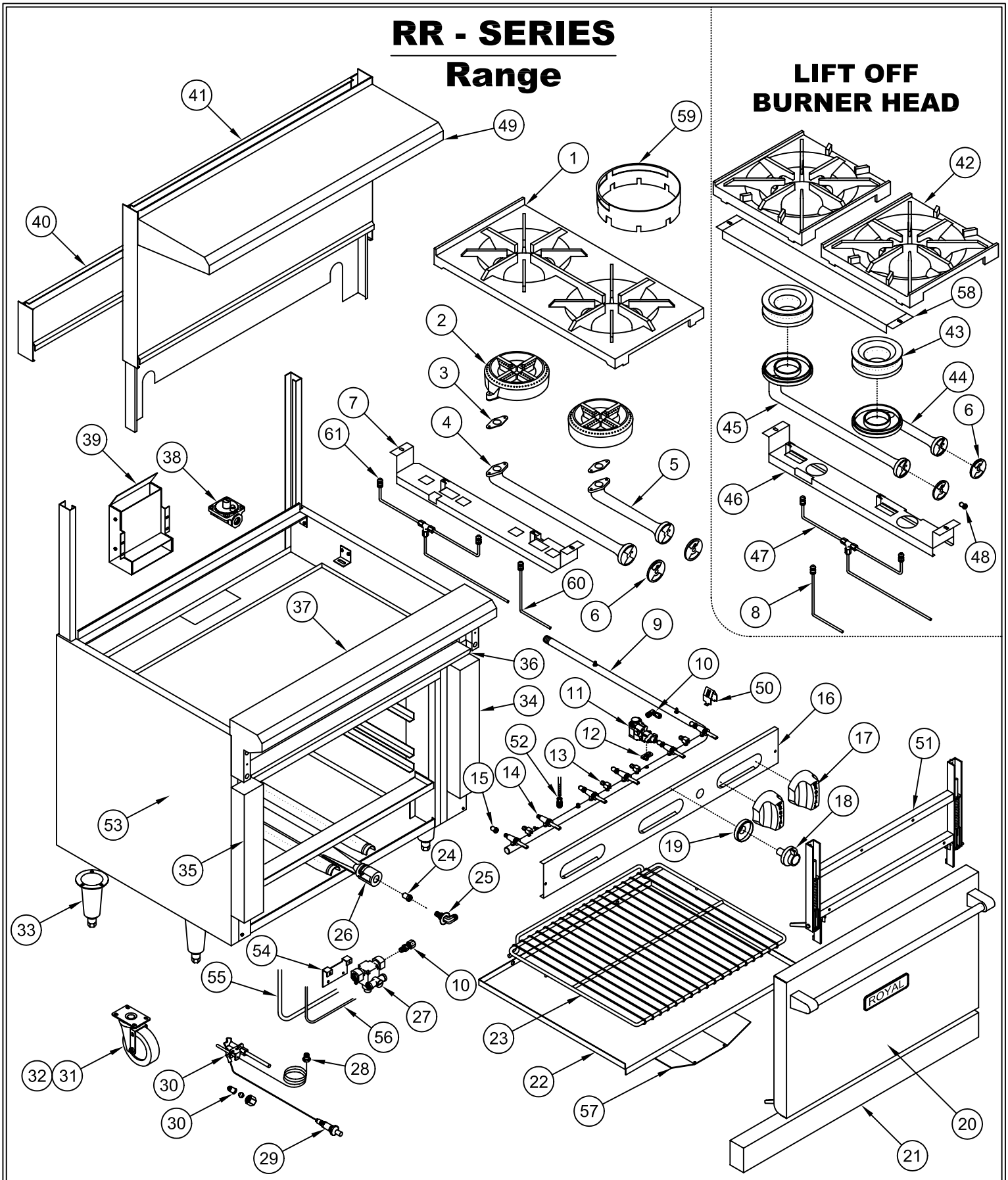

90° ELBOW FITTING	B.J. THERMOSTAT	"T" FLANGE	90° PILOT VALVE	GAS VALVE	ORIFICE HOOD	ORIFICE ELBOW	IGNITOR (OVEN)	PILOT (OVEN)
10	11	12	13	14	15 24 48	25	29	30

RR – Series Range

ITEM NO.	PART NO.	DESCRIPTION
1	1101	12” x 24” Top grate (cast iron)
2	1104	Open burner (head only)
3	1105	Open burner gasket & screw set
4	1107	18" Rear venturi (cast iron)
5	1106	6" Front venturi (cast iron)
6	1108	Air shutter (mixer)
7	30077	Burner hanger (open burner)
8	1110	Pilot assembly w/ferrule and compression nut (single burner)
9	3810 3811 3812 3813 3814	24” Manifold pipe 36” Manifold pipe 48” Manifold pipe 60” Manifold pipe 72” Manifold pipe
10	1509	1/4” NPT x 3/8” CC Straight fitting (brass)
11	2168	B.J. Thermostat (oven only)
	1519	1/4" NPT Plug (used to block outlet on thermostat)
12	1525	B.J. Thermostat flange
13	1625	1/8" NPT x 3/16" CC 90º Adjustable single pilot valve (brass)
14	1628	Gas valve (brass) w/out orifice
15	1121-42 1122-53	Orifice hood # 42 Open burner natural gas, 26,000 BTU Orifice hood # 53 Open burner propane gas, 26,000 BTU
16	30130 30151 30172 30193 30214	24” Valve cover 36” Valve cover 48” Valve cover 60” Valve cover 72” Valve cover
17	3102	Blue knob – flat side down
18	2167	Thermostat dial (black) – Oven only
19	2169	Thermostat bezel (chrome)
20	30132 30159	24” Oven door (complete) 36” Oven door (complete)
21	30009 30045	24” Kick plate 36” Kick plate
22	30010 30041	24” Oven bottom 36” Oven bottom
23	2624 2626	24” Oven rack 36” Oven rack
24	1121-36 1122-50	Oven burner # 36 Orifice (brass) natural gas Oven burner # 50 Orifice (brass) propane gas
25	1507	Orifice elbow 1/4” NPT x 3/8-27 (brass)
26	2610	“U” burner (oven)
27	2174	Oven safety valve with inverted flare nut and ferrule
28	2175	Thermocouple
29	2173	Manual spark igniter w/red push button
30	2209 2210	Oven Pilot – natural gas Oven Pilot – propane gas

RR Series Range Cont'd

ITEM NO.	PART NO.	DESCRIPTION
31	2193	Caster 5" w/brake
32	2192	Caster 5" without brake
33	1219	Chrome cone legs
34	30150	Filler panel – right side
35	30149	Filler panel – left side
36	30008 30039 30008	24" Crumb tray 36" Crumb tray 48" Crumb tray (Please order 2 ea. of part # 30008)
37	30124 30145 30166 30187 30208	24" Landing Ledge 36" Landing Ledge 48" Landing Ledge 60" Landing Ledge 72" Landing Ledge
38	1618 1619	Gas pressure regulator (nat. gas) Gas pressure regulator (propane Gas)
39	30103	Flue box assembly.
40	30133 30141 30177 30201 30215	24" Stub back assembly 36" Stub back assembly 48" Stub back assembly 60" Stub back assembly 72" Stub back assembly
41	30136 30138 30180 30182 30218	24" Back guard assembly 36" Back guard assembly 48" Back guard assembly 60" Back guard assembly 72" Back guard assembly
Lift Off Top Burners		
42	1100	12" x 12" Top grate (cast iron)
43	1710	Open burner – Lift off burner cap
44	1711	6" Front venturi – Lift off burner base (cast iron)
45	1712	18" Rear venturi – Lift off burner base (cast iron)
46	30087	Burner hanger – Lift off burner
47	1709	Pilot assembly w/ferrule and compression nut (double burner)
48	1121-39 1122-52	Lift off burner # 39 Orifice natural gas (30,000 BTU.) Lift off burner # 52 Orifice propane gas (30,000 BTU.)

RR Series Range Cont'd

ITEM NO.	PART NO.	DESCRIPTION
49	30131 30148 30169 30190 30211	24" Shelf 36" Shelf 48" Shelf 60" Shelf 70" Shelf
50	1001	Thermostat bulb clip
51	30013 30043	Door frame assy. (20" oven) Door frame assy. (26 ½" oven)
52	1002	1/8" NPT X 3/16" CC Brass Fitting
53	30094 30095	Left Side Panel Right Side Panel
54	30085 30100	Safety valve bracket (PN: 2174) Safety valve bracket (PN: 2174-B)
55	1003-**	3/8" Aluminized tubing (**Specify length of tubing)
56	1004-**	3/16" Aluminized tubing (**Specify length of tubing)
57	30036 30005	Oven flame spreader (26 ½" oven) Oven flame spreader (20" oven)
58	30091	Top grate support bracket
59	30402	Wok ring
60	1109	Pilot assembly w/ferrule and compression nut (single burner)
61	2212	Pilot assembly w/ferrule and compression nut (double burner)

For all other combinations:

- Griddle
- Raised Griddle
- Radiant Broiler

See next page.

RR - SERIES (Cont.)

Range Griddle, Radiant broiler, Raised Griddle

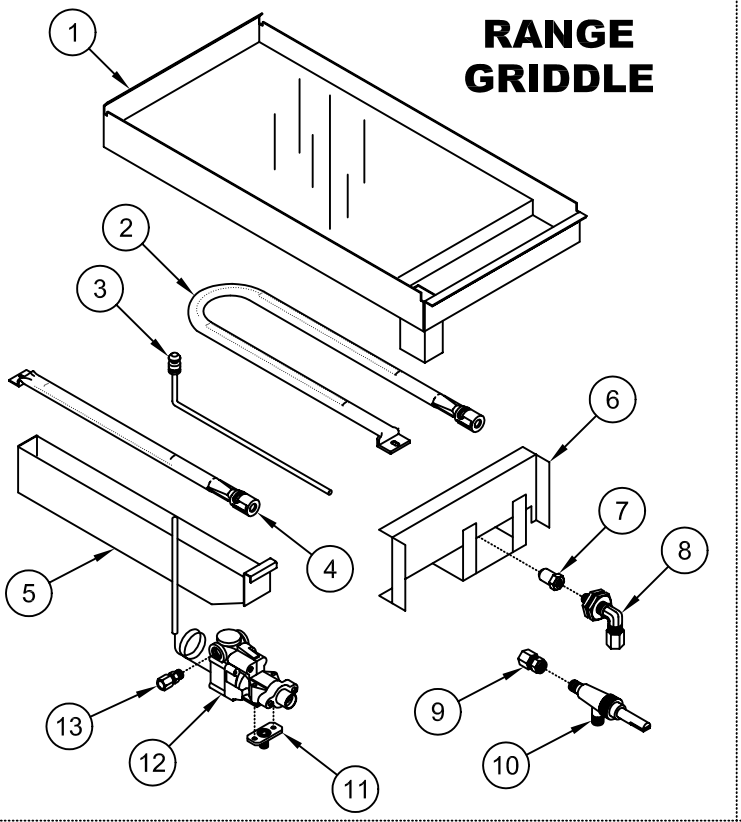

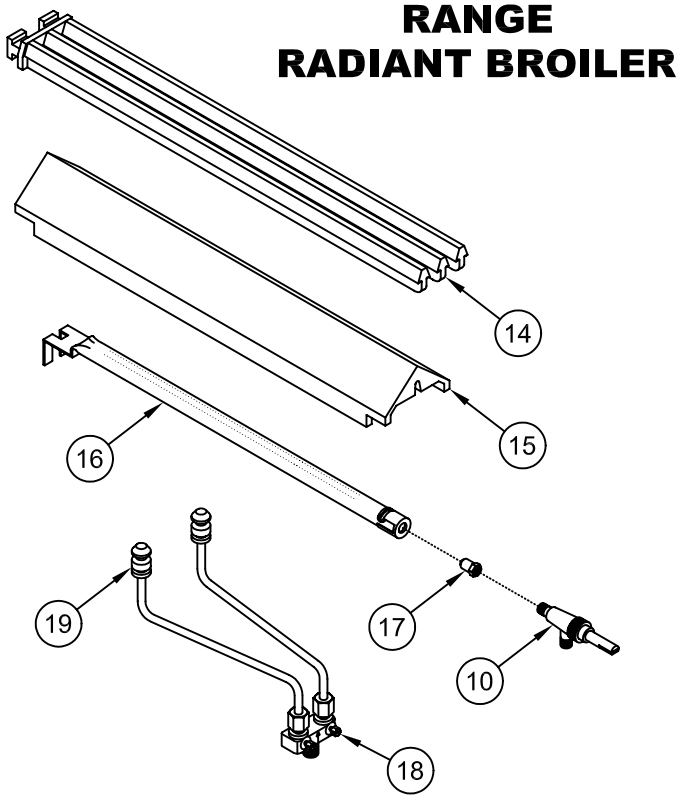

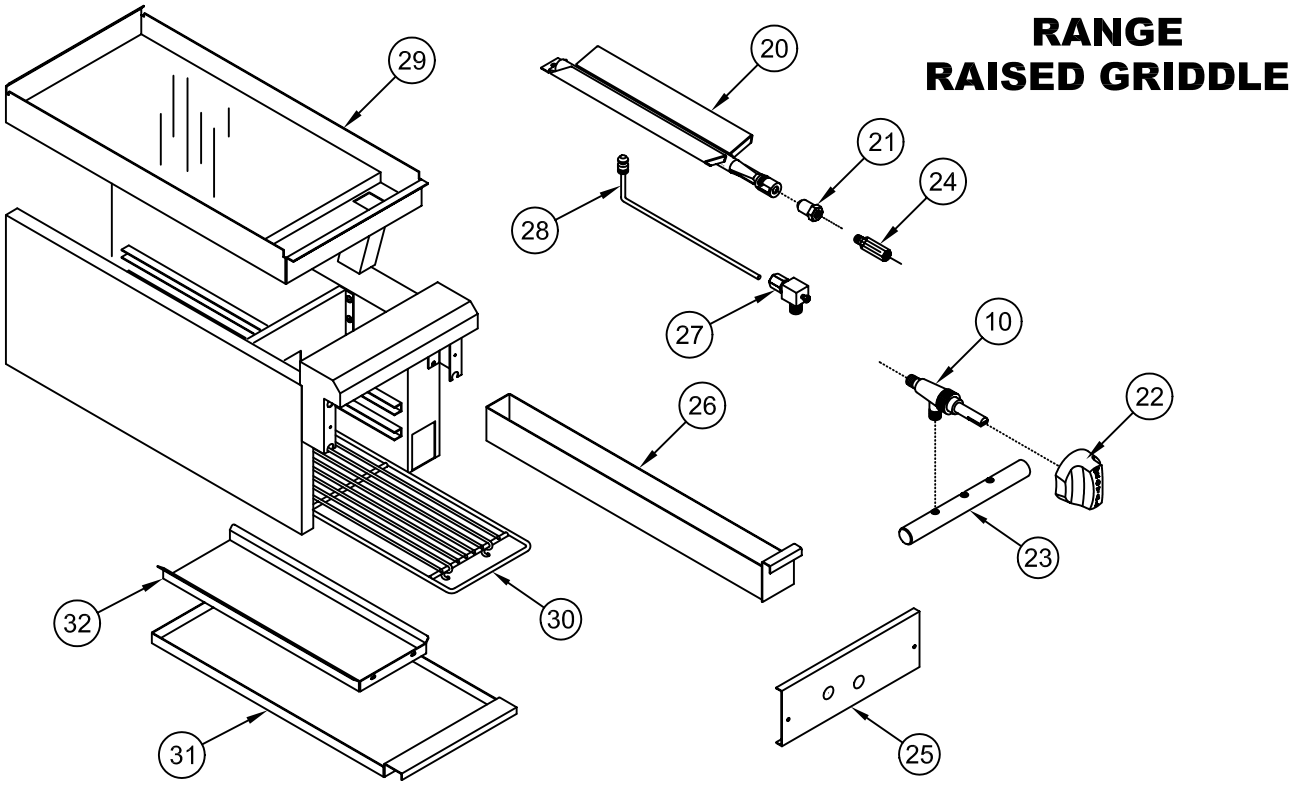

ORIFICE HOOD	ORIFICE ELBOW	GAS VALVE ADAPTER	GAS VALVE	B.J. THERMOSTAT	DUAL PILOT VALVE	GAS VALVE KNOB	ORIFICE ADAPTER	90° PILOT VALVE
		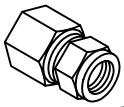	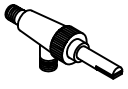		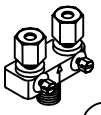			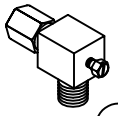
7 14 18	8	9	10	12	18	22	24	27

RR – Series

Range Griddle, Radiant Broiler, Raised Griddle

ITEM NO.	PART NO.	DESCRIPTION
Range Griddle		
1	30411 30427 30412 30428 30413 30429 30451 30454	12” Griddle plate assy. (Left) 12” Griddle plate assy. (Right) 24” Griddle plate assy. (Left) 24” Griddle plate assy. (Right) 36” Griddle plate assy. (Left) 36” Griddle plate assy. (Right) 48” Griddle plate assy. (Left) 48” Griddle plate assy. (Right)
2	2214	“U” burner (range griddle only)
3	2208	Pilot tip and tube assembly, range griddle
4	2211	Straight burner (range griddle only)
5	30406	Grease can assy.
6	30117 30425 30424 30432 30408 30459 30443 30446	12” Front baffle (Left) 12” Front baffle (Right) 24” Front baffle (Left) 24” Front baffle (Right) 36” Front baffle (Left) 36” Front baffle (Right) 48” Front baffle (Left) 48” Front baffle (Right)
7	1121-46 1122-55	Orifice hood (griddle) #46 (brass) natural gas, 20,000 BTU Orifice hood (griddle) #55 (brass) propane gas, 20,000 BTU
8	1508	Orifice elbow 3/8 CC x 3/8-27 (brass)
9	1627	Adapter 3/8-27 x 3/8" CC (gas valve)
10	1628	Gas valve (brass) w/out orifice
11	1525	Thermostat flange nipple
12	1520	B.J. Thermostat (griddle)
13	1509	1/4 NPT x 3/8 CC Straight fitting
Radiant Broiler		
14	1900	3" x 21" Top Grate (Cast Iron)
15	1902	Burner radiant (cast iron)
16	1904	Stainless steel burner w/ air shutter
17	1121-50 1122-56	Orifice hood (RB) #50 (brass) natural gas, 15,000 BTU Orifice hood (RB) #56 (brass) propane gas, 15,000 BTU
18	1211	1/8" NPT x 3/16" CC Adjustable double pilot valve (brass)
19	1937	Pilot tip assembly

RR – Series (cont.)

Raised Griddle

ITEM NO.	PART NO.	DESCRIPTION
20	2323	Burner with radiant
21	1121-50 1122-56	Orifice hood (RG) #50 (brass) natural gas, 20,000 BTU Orifice hood (RG) #56 (brass) propane gas, 20,000 BTU
22	3099	Blue knob – flat side up
23	2145 2146	RRG-12” Manifold pipe RRG-24” Manifold pipe
24	1509	3/8” Orifice extension fitting (brass)
25	30286 30308	RRG-12” Valve cover RRG-24” Valve cover
26	30264	RRG Grease can assy.
27	1625	1/8" NPT x 3/16" CC 90º Adjustable single pilot valve (brass)
28	2207	Pilot tip and tube assembly, range raised griddle
29	30287 30312	RRG-12” Griddle plate assy. RRG-24” Griddle plate assy.
30	2324 2325	RRG-12” Rack RRG-24” Rack
31	30276 30296	RRG-12” Crumb tray RRG-24” Crumb tray
32	30275 30295	RRG-12” Drip pan RRG-24” Drip pan

RR-60-C SERIES
RANGE CONVECTION OVEN

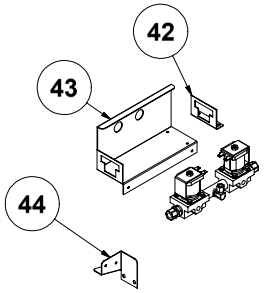

RR-C - SERIES
RANGE CONVECTION OVEN

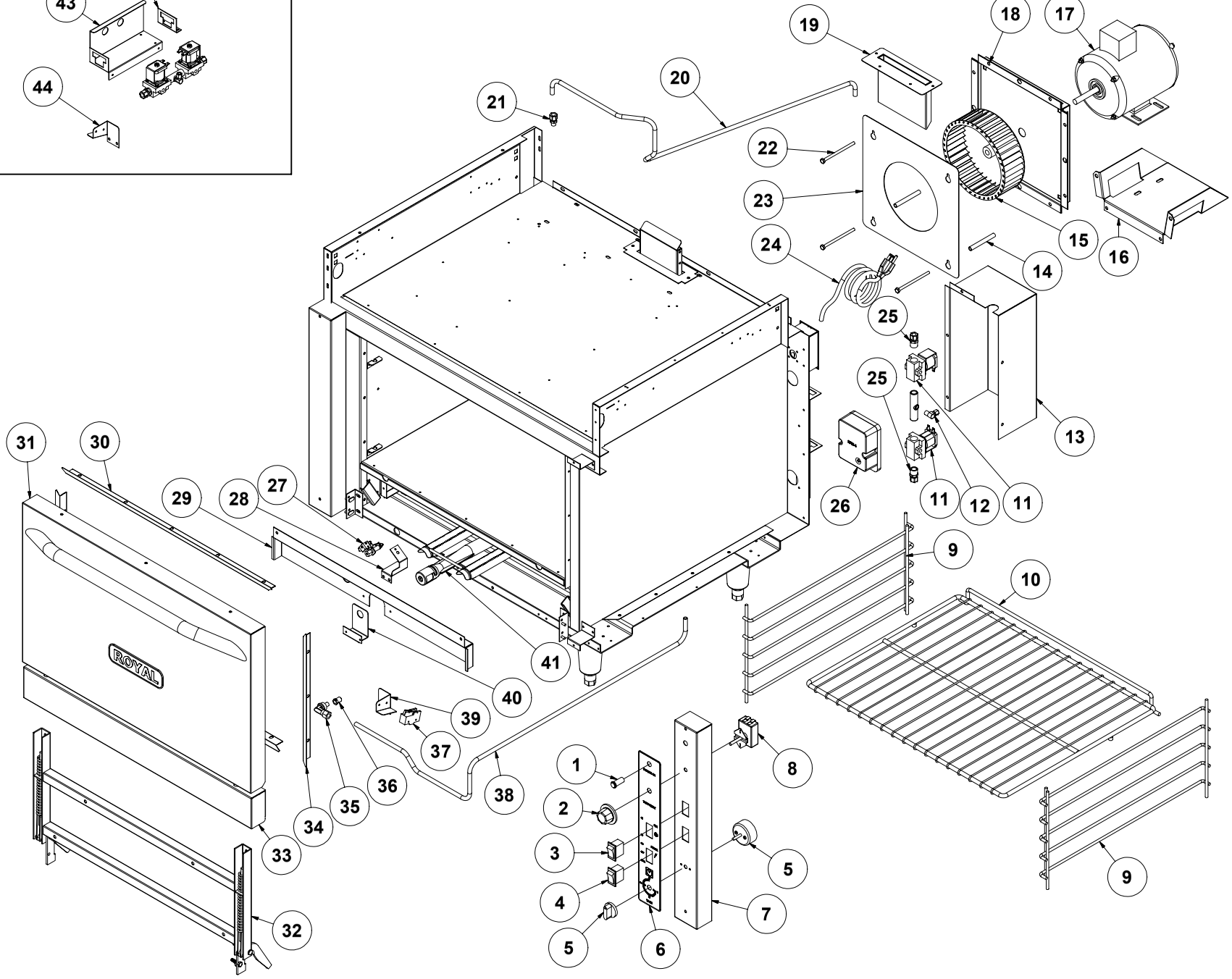

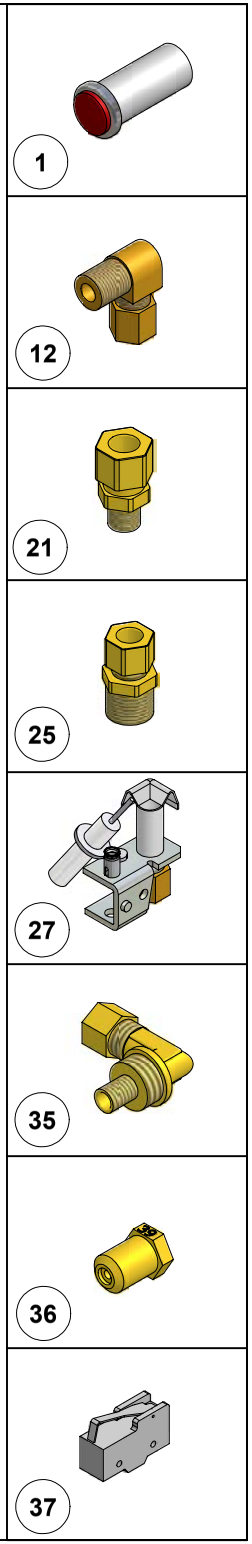

RR – Series Range With Convection Oven Base

ITEM NO.	PART NO.	DESCRIPTION
1	2522	Indicator Light
2	2523	Thermostat Dial
3	2525	Switch, Oven Fan High/Low
4	2526	Switch, Power—3 Position
5	2527	Timer
	3098	Knob For Timer
6	2470	Control Panel Decal
7	30725	Control Panel R/H For 36” Range
8	2520	Thermostat
9	3200	Oven Rack Guide
10	3210	Oven Rack
11	2515	Solenoid Valve
12	2516	Brass Fitting - ¼ CC X 1/8 NPT X 90 Degrees
13	30740	Module Cover
14	2505	Blower Spacer Tube
15	2503	Blower Wheel RR-C
16	30574	Motor Mount Bracket
17	2500	Motor
18	30602	Motor Mount Weld Plate Assy.
19	30772	Snorkel Tube Weld Assembly
20	4518	Manifold Tubing (Manifold To Solenoid 3/8 Aluminized Tubing)
21	1511	Straight Connector (3/8 CC X 1/8 NPT) (Male Thread)
22	2507	Hex Head Bolt (1/4-20 X 4)
23	30721	Blower Baffle
24	2510	Power Cord
25	2514	Straight Connector (3/8 CC X 3/8 NPT) (Male Thread)
26	5853	RAM-4 Spark Module
27	2209	Oven Pilot (Natural)
	2210	Oven Pilot (Propane)
28	30114	Pilot Bracket
29	30706	Oven Front Baffle
30	30727	Door Seals (Top—Bottom)
31	30058	Convection Base Oven Door (Complete Assy.)
32	30057	Convection Base Door Frame Assy.
33	30045	36” Kick Plate
34	30728	Door Seal Sides
35	1508	Orifice Elbow (3/8 CC X 3/8-27)
36	1121-39	Orifice Hood #39 (Brass) Natural Gas 30,000 B.T.U.
	1122-52	Orifice Hood #52 (Brass) Propane Gas 30,000 B.T.U.
37	2539	Switch, Oven Door
38	4517	Burner Tubing 3/8 Diameter Aluminum
39	30734	Door Switch Bracket
40	30729	Oven Elbow Bracket
41	2610	“U” Burner (Oven)
42	30757	Solenoid End Bracket
43	30741	Solenoid Bracket
44	30775	Door Switch Bracket L/H for RR-60-C